Installation & Operation Instructions For Big Dipper 51k Series Internal Strainer (IS) Units

Models W-750-IS and W-1000-IS (Including 230 VAC Units)

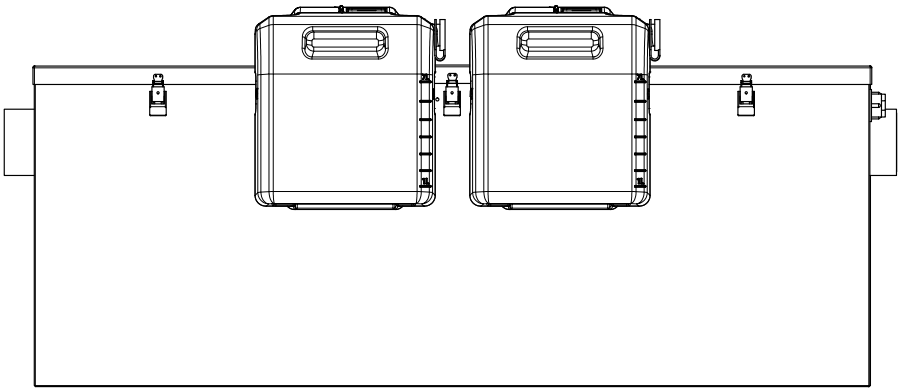

Big Dipper W-1000-IS

Complies with C22.2

** Please consult Thermaco, Inc. for specific models tested, certified and/or listed by these organizations.*

Copyright ©2020 Big Dipper® Thermaco, Inc. • P.O. Box 2548 • Asheboro, NC 27204
Toll Free: (800) 633-4204 • V: (336) 629-4651 • F: (336) 626-5739
info@thermaco.com • www.big-dipper.com

Table of Contents

IS System Overview 3
IS System Maintenance 4
IS Digital Control Operation 5
IS System Troubleshooting 6
How To Reverse IS System Operation 7
Plumbing Installation 8
Vented Flow Control Installation 11
Electrical Installation 12
Safety Instructions 13
Grounding Instructions 13
IS System Wiring Diagram 15
IS Component Identification 16
IS Replacement Parts 19
Limited Warranty 20

©2020 Thermaco, Incorporated All rights reserved • Patented/Patents Pending • Specifications subject to change without notice
646 Greensboro St. • Asheboro, N. C. 27204-2548 • Phone (336) 629-4651

Big Dipper® Internal Strainer System Overview

The **Thermaco, Inc. Big Dipper®** Automatic Grease and Oils Removal System removes free-floating grease & oils from kitchen drain water flows. As most food service facility managers already know, grease buildup within a building's plumbing drainage system is a major cause of problems due to drain line blockages. These problems jeopardize normal operations as well as create health and safety hazards within the facility itself.

The proper installation of a Big Dipper System can reduce or eliminate grease problems. Use of the Big Dipper assures minimization and/or elimination of costly sewer surcharges and fines through efficient separation and removal of free-floating grease & oils. In addition, the Big Dipper also helps reduce or eliminate pumping and disposal costs associated with conventional grease traps or interceptors. The recovered grease & oils are substantially water-free and are suitable for recycling by local rendering and/or biodiesel companies.

The Big Dipper system is an automatic, self-cleaning device. As greasy kitchen effluent drains from kitchen fixtures, the unit traps the grease & oils. These separate from the effluent and rise to the surface of the separator tank. The unit automatically skims the trapped grease & oils and transfers the grease & oils to a collection container. A digital control maintains the self cleaning operation, activating the skimming wheel periodically based on the setting chosen. Only the "cleaned" water exits the unit and flows into the facility drain lines. The Big Dipper IS automatic systems operate most efficiently when servicing single fixtures such as a 1 to 3-compartment sink or a pre-rinse station.

The Big Dipper system's compact footprint allows installation directly at the source where grease problems originate. The system design also allows easy maintenance and operation requiring only a minimal amount of daily and weekly maintenance to maintain peak operating performance.

The Big Dipper system design allows for maximum installation flexibility. Reversing the system operation is a simple as rotating the cover assembly of the unit.

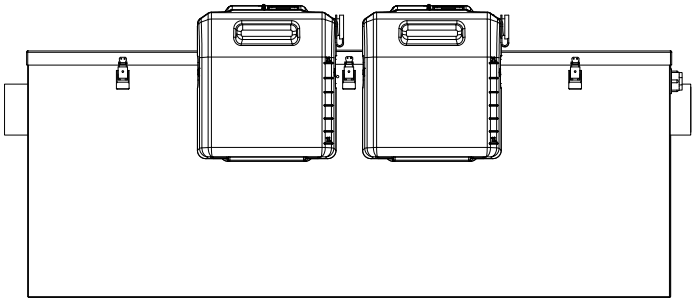

Hydromechanical grease interceptors (formerly referred to as grease traps), grease separators, automatic recovery units, grease removal devices and other similar plumbing devices receiving kitchen flows from sinks, floor drains, woks and other food bearing sources may generate odors. The 51k Series Big Dipper has been designed to seal in odors and prevent them from leaking into the kitchen through the tank lids. It does not prevent odors related to the rest of the plumbing system including but not limited to: open floor drains, air gaps, external solids straining devices, improper venting, and odors generated elsewhere in the plumbing system. These odors are usually prevented by good area ventilation, frequent fluid inputs, good product maintenance practices and proper product installation. Additional pretreatment steps not performed by the Big Dipper automatic grease interceptor, including aeration, chlorination, improved area ventilation and additional maintenance control, may be needed at some sites.

©2020 Thermaco, Incorporated All rights reserved • Patented/Patents Pending • Specifications subject to change without notice

646 Greensboro St. • Asheboro, N. C. 27204-2548 • Phone (336) 629-4651

Big Dipper® Internal Strainer (IS) System Maintenance

Daily Maintenance:

(A) Empty the clear plastic grease/oils collection container (located beside the unit) prior to its becoming full once each day. The Big Dipper recovers grease and oil virtually water-free so that they can be recycled. The collector container should be washed periodically so as to maintain the easy viewing translucent characteristic of the collector. Contents may be disposed of in rendering barrel with permission of rendering company or as solid food waste. To dispose in this manner, empty grease into plastic bucket lined with trash bag and allow contents to solidify at room temperature or in cooler before throwing into garbage.

(B) The internal strainer basket should be removed and emptied into a garbage container by shaking briskly. Wash the inside and outside surfaces of the strainer after emptying.

Weekly Maintenance:

(A) Check the collection trough and the wiper blades for any solids build-up. Wipe off any accumulated deposits and assure that the wiper blade assembly is re-placed properly.

(B) Press the Skim Start/Stop button (on the bottom-right of the user interface) to ensure that the motor and skimming wheel are still operating correctly. Press again to stop test. This will not affect the normal run-time of the unit.

(C) Check the thickness of the grease layer at the top of the unit. There should be no appreciable amount of grease or oil left in the tank immediately after the daily automatic skimming cycle. If there is more than a 1/2” (13 mm) thick layer of grease after the skimming cycle, this indicates a need to increase the skimming time. Increase the digital control settings accordingly until a clean unit appearance is obtained after the automatic skimming cycle. A simple guide is to change to the next higher setting and run for a period of time until enough grease is being skimmed from the tank.

Quarterly Maintenance:

(A) The internal strainer basket in the unit is designed to remove incidental solids from kitchen drain flows. Over a period of time, sediment consisting of very fine particles may begin to accumulate on the bottom of the unit. If this build-up is allowed to continue, it may eventually block the outlet baffle. To prevent this from occurring, remove the lid and stir the bottom of the unit with a long handled spatula while water is flowing to flush out the sediment. Occasionally drain and clean the unit thoroughly. Properly used, a wet-vac may be appropriate for this purpose.

***CAUTION! DISCONNECT POWER TO UNIT BEFORE CLEANING to prevent damage to the unit and personal injury**

***NOTE: Before energizing unit after cleaning, fill tank with water to protect wipers and heater from damage**

©2020 Thermaco, Incorporated All rights reserved • Patented/Patents Pending • Specifications subject to change without notice

51K Series

Big Dipper® IS System
Digital Control Operation

Timed Skimming Default

Using the "User Interface" five levels of skimming may be selected in the "default" mode using the 'Select Skim Mode' button. By selecting one of the skim settings – 1, 2, 3, 4, or 5 - the skimming time per day (indicated to the right of the light) is activated. The LED associated with the selected button is illuminated continuously as an indicator of the selected skim cycle and as a "power on" indicator. If the skimming level is changed during an active skimming cycle, the next active skim cycle will be at the new setting (The LED associated with the newly selected level will change immediately). If the skimming cycle is changed between active skimming cycles the next skim cycle will be at the new level.

The skim cycle will occur at the same time each day. This is determined by the time at which power is applied to the unit. In the case of setting 5, the unit will skim for 60 minutes every 12 hours. To choose a new skim time, disengage power to the unit and reapply power at the time when skim cycle is desired.

All skim cycles will last no more than 60 minutes at one time. In the case of setting 5 in default mode or settings in extreme mode, the electrical assembly will run more than one 60 minute cycle per day.

Motor Exercising

For all selected skimming levels with system delays greater than 12 hours the skimmer motor will be energized for 5 seconds every 12 hours. Only the motor will be energized (no heater operation) at these exercising times.

Skim Start/Stop Button Operation

Any time the start button is depressed operation begins for the selected skim level. Pressing this button does not effect the normal timing of the unit. Pressing this button again will stop the current skim.

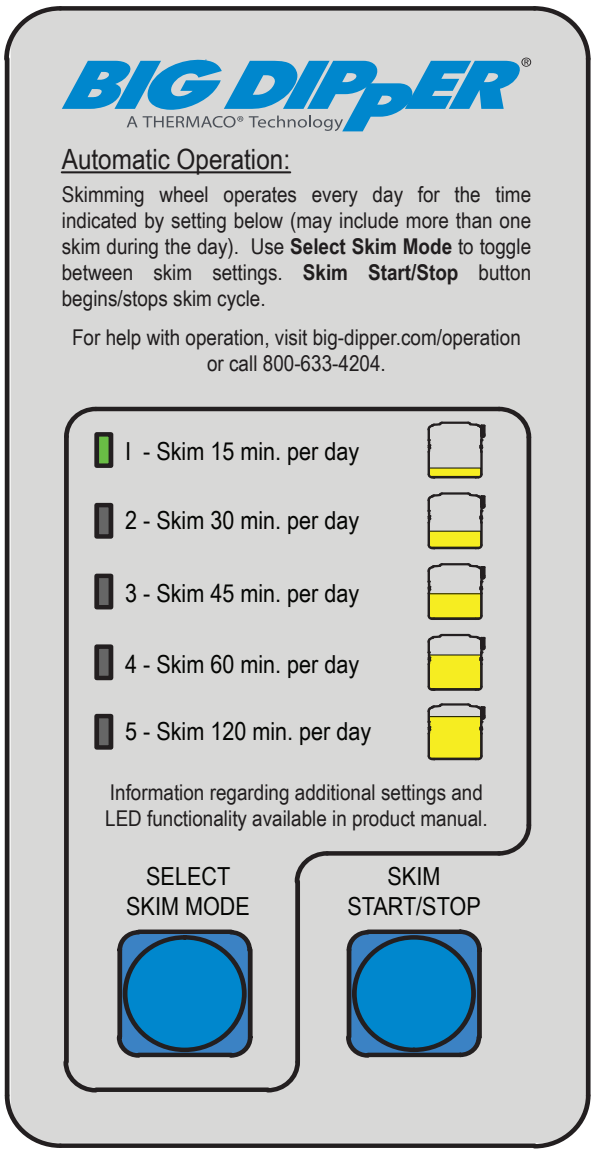

Heater Operation

By default, the heater activates 60 minutes prior to a scheduled skim cycle. The heater will operate under thermistor control with settings of 130°F heater off point, 120°F heater on point for the duration of the preheat and skim cycle..

Extreme Modes

Two (2) additional run-times are accessible which allow the unit to operate more frequently.

- 2+5 - When lights 2 and 5 are both illuminated, the unit will skim for 60 minutes every 6 hours
- 3+5 - When lights 3 and 5 are both illuminated, the unit will skim for 60 minutes every 4 hours

Selecting Default or Extreme skimming

To toggle between the two skimming levels remove power from the Big Dipper® either by unplugging the unit or lifting the center module to open the interlock switch. Reapply power while holding the Select Skim Mode button depressed. The number of LEDs illuminated will be the skim level indicator – 1 LED for the default modes and two for the extreme modes. When toggled from extreme to default mode, level 3 will be initially selected.

©2020 Thermaco, Incorporated All rights reserved • Patented/Patents Pending • Specifications subject to change without notice

646 Greensboro St. • Asheboro, N. C. 27204-2548 • Phone (336) 629-4651

51K Series

Big Dipper® IS System Troubleshooting

Big Dipper unit overflows

(1) Check to see that the outlet pipe is not reduced to a smaller size, the outlet piping is vented, has as few 90 degree outlet turns as possible, and that no "P" trap is installed on the outlet. Re-plumb the piping, if necessary. Check outlet piping for clogs. Have a plumber clean the line, if necessary.

(2) Make sure that the solids strainer is in place and emptied daily.

(3) Check the bottom of the grease chamber for excessive solids and silt buildup which may be blocking the outlet baffle. Disconnect the power and use a long handled spatula or similar instrument to stir the bottom while water flows through the unit. If necessary, drain and clean the sediment from the unit. To prevent recurrence, schedule this cleaning to be done on a regular basis (properly used, a wet vac may be appropriate for cleaning sediment from the bottom of the unit).

(4) Make sure the flow rate to the unit does not exceed the maximum flow rate, which is shown on the nameplate. If necessary, have a plumber install an approved flow control to restrict the inlet flow to the specified level or install a properly sized Big Dipper for the application.

Excessive water observed in the grease collection container

(1) Check Digital Control for excessive run time. Unit will pick up incidental water after all grease is removed. If necessary, reduce the digital control setting (i.e. 3 to 2) until no water is observed in the grease collection container.

No grease is collected in the container

(1) Check to be sure the power is on and the correct setting is chosen. One of the setting buttons should be illuminated. If none of the setting buttons are illuminated, the unit is not powered.

(2) Lift the sump cover and clean away any buildup that may be present on the wiper blades or collection trough. Make sure the wiper blade(s) are properly in place on the skimmer wheels. Replace wiper blades when worn or warped.

(3) Press the Skim Start/Stop Button on the bottom of the user interface to ensure that the skimming wheel turns. CAUTION: Keep your hands away from moving parts to avoid possible injury. If the skimmer motor does not come on, the motor assembly may need to be replaced.

(4) Check for congealed grease in the unit. If the Big Dipper's heating element is not warming the unit, the heating element may need to be replaced.

(5) Some sites do not generate enough grease to be captured by the skimming process. Set Control for minimum operation - Setting 1 for Light Skimming Operation.

Objectionable odor

(1) Clean the solids strainer and grease collection container more frequently.

(2) Make sure grease/oil is being skimmed properly from the unit.

(3) Check Digital Control for excessive run time. Unit will pick up incidental water after all grease is removed. If necessary, reduce the skim setting (i.e. 3 to 2) until no water is observed in the grease collection container.

(4) If excessive sediment has collected on the bottom of the unit, clean the unit as described in item 3 in "Big Dipper unit overflows."

(5) Hydromechanical grease interceptors, grease traps, automatic recovery units, grease removal devices and other similar plumbing devices receiving kitchen flows from sinks, floor drains, woks and other food bearing sources may generate odors. While the Advanced Odor Protection features of your Big Dipper are designed to keep odors from escaping the lid, there may be other factors influencing odor evolution and dissemination. These include room ventilation, kitchen menu, ambient temperatures, ware washing practices, grease/oil input, daily input fluid volume, sanitizers, installation plumbing design and product maintenance/upkeep. Odors are usually prevented by good area ventilation, frequent fluid inputs, good product maintenance practices and proper product installation. Additional pretreatment steps not performed by the Big Dipper automatic grease interceptor, including aeration, chlorination, improved area ventilation and additional maintenance control, may be needed at some sites.

©2020 Thermaco, Incorporated All rights reserved • Patented/Patents Pending • Specifications subject to change without notice

646 Greensboro St. • Asheboro, N. C. 27204-2548 • Phone (336) 629-4651

How To Reverse Big Dipper® IS System Unit Operation

***ALWAYS UNPLUG UNIT BEFORE REMOVING LID**
***SYSTEM WILL NOT OPERATE UNLESS CENTER MODULE IS IN PLACE**

*Note:
W-750-IS has one (1) module.
W-1000-IS has two (2) modules.

1)

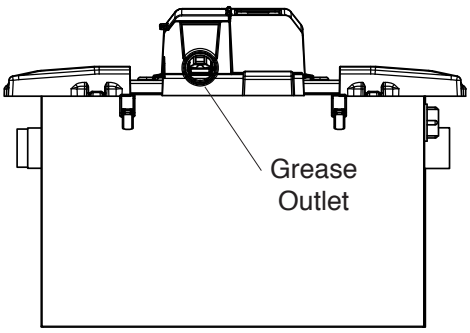

1) Unlatch the Unit lid. Pull the side wings outward.

2)

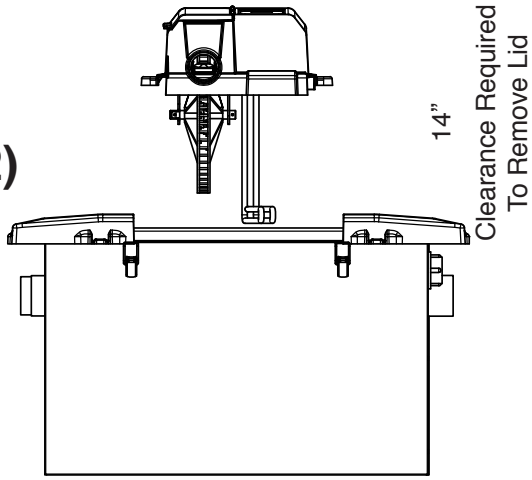

2) Lift the center module up off of the unit, ensuring clearance for the heater.

3)

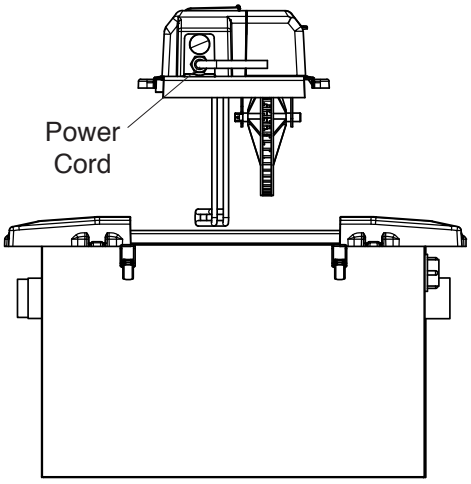

3) Rotate the center module 180º.

4)

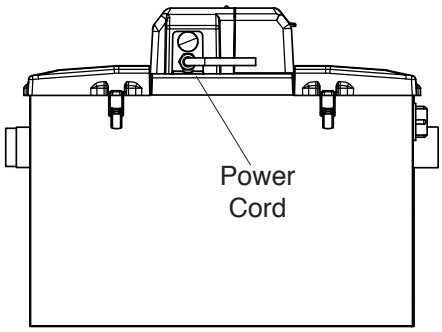

4) Lower the center module back down on top of the unit. Move the two side wings back into place & fasten all latches.

©2020 Thermaco, Incorporated All rights reserved • Patented/Patents Pending • Specifications subject to change without notice

Big Dipper® IS System Plumbing Installation

Locating the Unit

To minimize grease build-up in piping, a Big Dipper system should be located as close as possible to the fixture it is serving. The system should be visible and easily accessible for maintenance and inspection. The unit must be in a level position. **Be sure to check the Specification Sheet for your model for the exact clearances needed for installation.** If the system is located directly on the floor, the bottom should be sealed to the floor with an approved silicone type sealant. Make sure the height above the Internal Strainer access cover is enough to remove the strainer basket.

Inlet/Outlet Piping

The inlet and outlet piping connections require flexible sleeve pipe couplings. Keep outlet piping as straight as possible. Use only "sweep" connections. **Do not reduce the pipe sizing on the outlet piping.** Do not install "P" trap on outlet connection of system. (Note: The system already has an internal gas trap). Failure to install to these instructions voids Thermaco's Warranty.

Flow Controls

Big Dipper Systems are tested and rated with an external flow control. We caution against any installation that does not use an external flow control. Each Big Dipper comes with the recommended flow control device.

Fill Unit With Water Before Powering

Big Dipper systems, equipped with an electric heating element, MUST be filled with water before energizing the power to the system. Failure to do so may damage the electric heating element. These elements will NOT be replaced under Thermaco's Warranty.

Venting the Outlet

An outlet vent or approved vacuum breaker of at least 1/2 the diameter of the system's outlet connection must be present as close as possible to the Big Dipper outlet to prevent possible siphonage problems. Failure to provide a vent for the system voids Thermaco's Warranty for the system.

For High Head Height Applications Over Six (6) Feet (1.95 m)

Big Dipper systems are equipped with an internal flow regulator located inside the inlet end of the system. Verify its location and placement prior to connecting the inlet piping. If your code requires a vertical type flow regulator, an approved control with a flow rating matching the system's flow rate should be used. Note: When a Big Dipper is servicing multiple fixtures, some codes require separate flow controls for each fixture. See following pages for suggested high head height flow regulation installation.

Do Not Use With Food Grinders, Potato Peelers or Waste Disposal Units

If the system is connected to a Waste Disposal Unit, Garbage Grinder or Potato Peeler, Thermaco's Warranty will be void.

Fill Unit With Water and Disconnect During Periods of Kitchen Inactivity

Big Dipper systems MUST be filled with water and the power must be disconnected during any inactivity lasting longer than two (2) weeks. Failure to do so may damage the unit. Thermaco's Warranty will be void if proper precaution is not taken for extended periods of kitchen inactivity.

©2020 Thermaco, Incorporated All rights reserved • Patented/Patents Pending • Specifications subject to change without notice

51K Series

Big Dipper® IS System Plumbing Installation

The following drawings show proposed venting for Big Dipper units in various situations. **Check state or local plumbing code to determine proper installation for your facility.**

Sites without Upstream Facility Vents or Other Air Relief

Installations without Upstream Facility Vents or other Air Relief require the use of the vessel vent (also referred to as a chamber vent) to prevent air bound conditions. Thermaco provides a 1" NPT connection by which this **vessel vent may be connected from the unit to atmosphere** (preferred) or the facility vent. Do not connect vessel vent to air admittance valve.

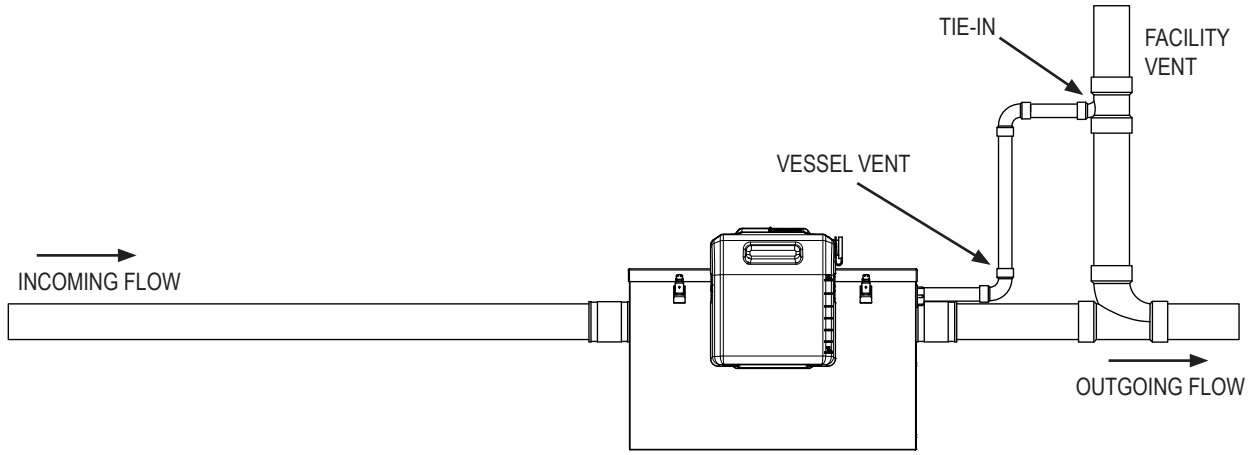

Sites with Upstream Facility Vents

Sites using facility vents upstream of the Big Dipper unit do not require the use of a vessel vent. In this case, the open inlet design of the unit works in conjunction with the facility vent and upstream P-trap to facilitate air movement into and out of the interior grease interceptor air space and prevents air bound conditions from occurring. P-trap is only required in certain districts, and is not recommended by Big Dipper.

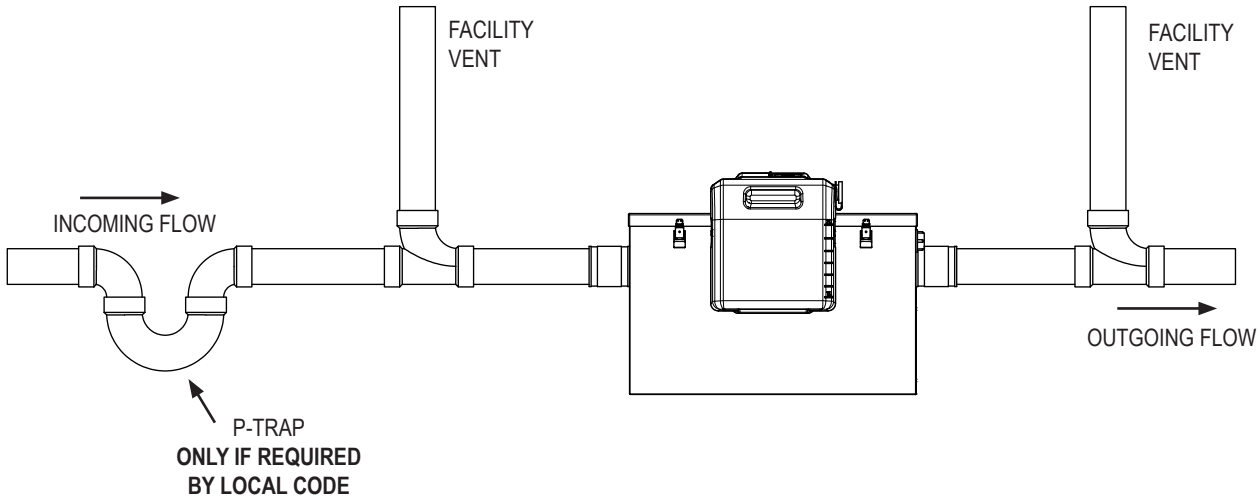

NOTE: Drawing for reference only. Equipment must be installed in compliance with all applicable laws, regulations and codes, including plumbing codes. Installation should be performed by a qualified plumber.

©2020 Thermaco, Incorporated All rights reserved • Patented/Patents Pending • Specifications subject to change without notice

646 Greensboro St. • Asheboro, N. C. 27204-2548 • Phone (336) 629-4651

51K Series

Big Dipper® IS System Plumbing Installation

Sometimes space restrictions require the installation of Big Dipper units in basement locations where significant head pressure becomes a factor. The **Big Dipper® VFCA Vented Flow Control** module provides an option for use with installations where a significant amount of head pressure is present (greater than 6 ft./1.95 m) or where applicable regulations require vented flow controls. A Vented Flow Control helps reduce problems associated with high head pressure and helps slow the drainwater flow down. The VFCA kit contains an appropriate fitting and flow control orifice. **Multiply Big Dipper sizing calculations by 1.5 when using a VFCA.**

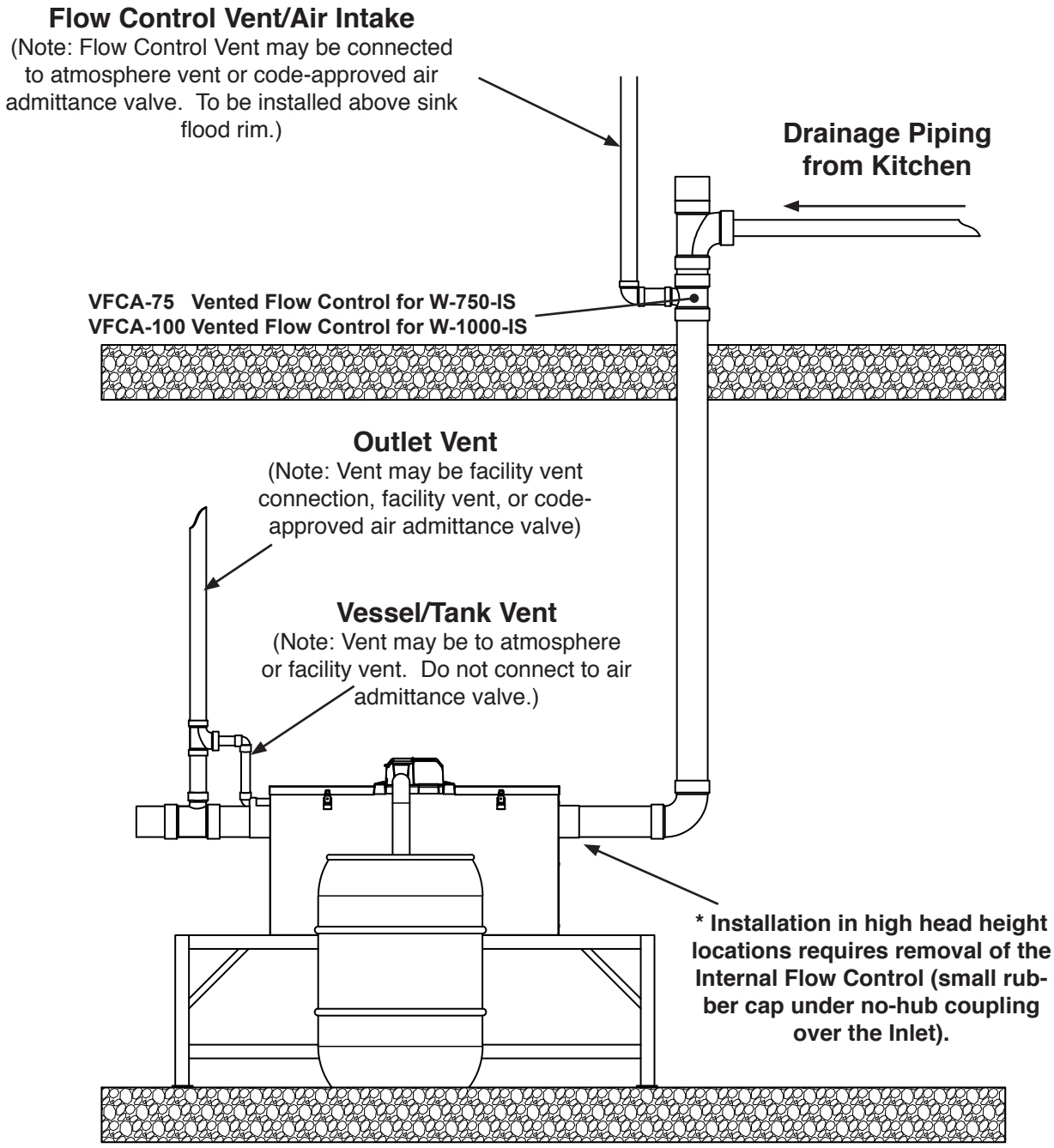

NOTE: Drawing for reference only. Equipment must be installed in compliance with all applicable laws, regulations and codes, including plumbing codes. Installation should be performed by a qualified plumber.

©2020 Thermaco, Incorporated All rights reserved • Patented/Patents Pending • Specifications subject to change without notice

646 Greensboro St. • Asheboro, N. C. 27204-2548 • Phone (336) 629-4651

51K Series

VFCA Vented Flow Control Installation Instructions

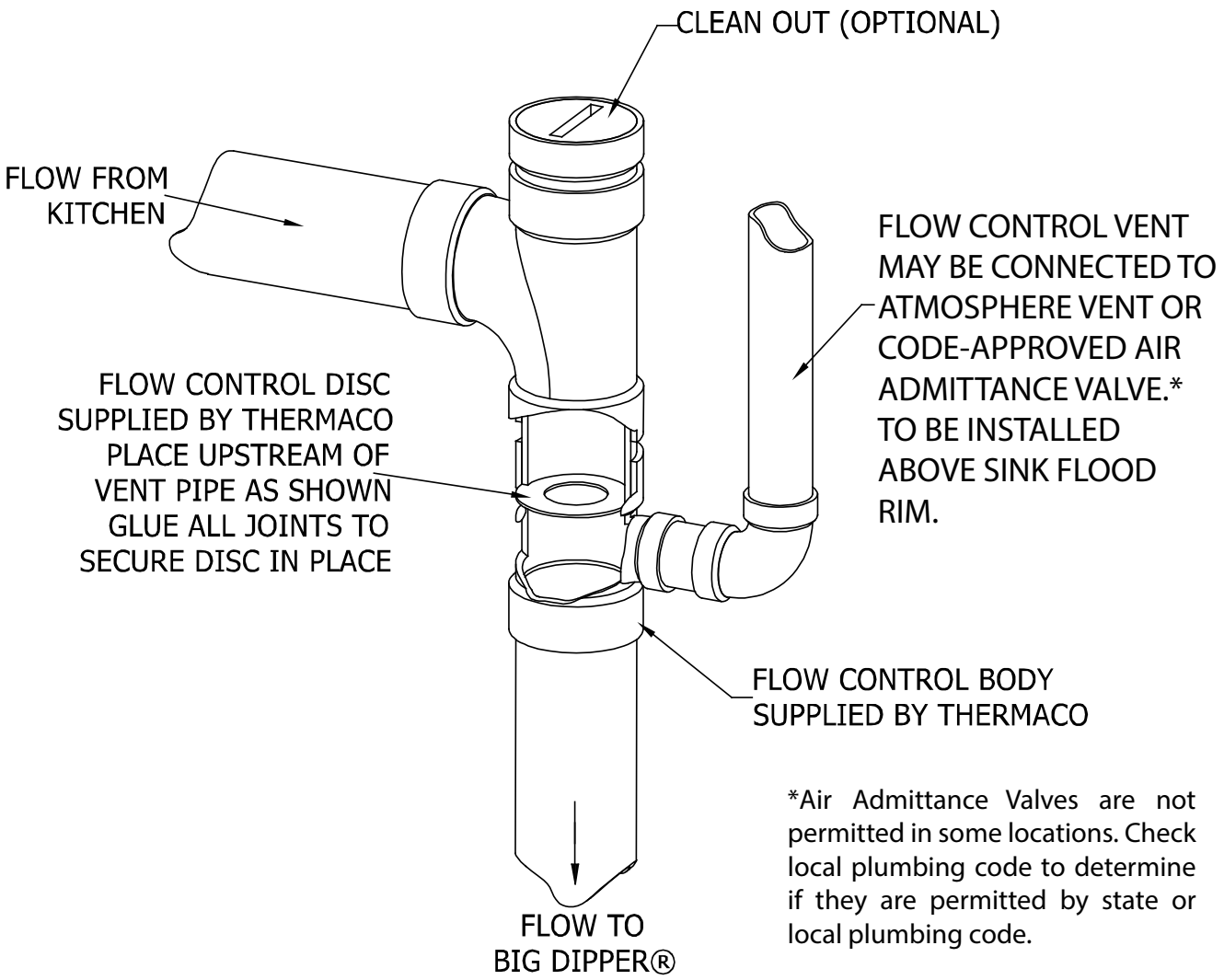

*Air Admittance Valves are not permitted in some locations. Check local plumbing code to determine if they are permitted by state or local plumbing code.

IMPORTANT!

The flow control should be installed after the last fixture as close as possible to the under side of the lowest fixture. If the flow control is installed more than 2 feet below the lowest fixture consult the manufacturer for a more restrictive disc. Remove the rubber flow control from the Big Dipper system.

Note: This equipment must be installed to comply with all applicable national, state, and local plumbing codes for your area. Installation should only be performed by a qualified plumber.

©2020 Thermaco, Incorporated All rights reserved • Patented/Patents Pending • Specifications subject to change without notice

646 Greensboro St. • Asheboro, N. C. 27204-2548 • Phone (336) 629-4651

MNL-ISCU51000 11

Big Dipper® IS System Electrical Installation

The Big Dipper W-750-IS model is equipped with one (1) Push Button Digital Time Controller while the W-1000-IS model is equipped with two (2) Push Button Digital Time Controllers. The push button control is located under the hinged lid of the motor enclosure on top of the lid of Big Dipper (See Digital Timer Operation Instructions). **The Big Dipper should only be plugged into a properly grounded 3-prong 120 VAC or 230 VAC outlet.** If possible, the power supply outlet for the Big Dipper should be connected to an electrical circuit controlled by a ground fault circuit breaker.

One of the setting buttons should be illuminated to show the unit is powered. If none of the setting buttons are illuminated, the unit is not powered.

This Big Dipper unit is shipped from the Factory wired for **Preheat Operation**. This means the Heater will come on 1 hour prior to scheduled skim and heat the water to 130ºF ±5 and maintain this temperature range for the duration of the skim cycle. Continuous Heater Operation is where the Heater is active at all times. To switch to alternative heating programming, please contact a Thermaco representative for further instructions.

Note: The Big Dipper unit will not operate when the lid is removed.

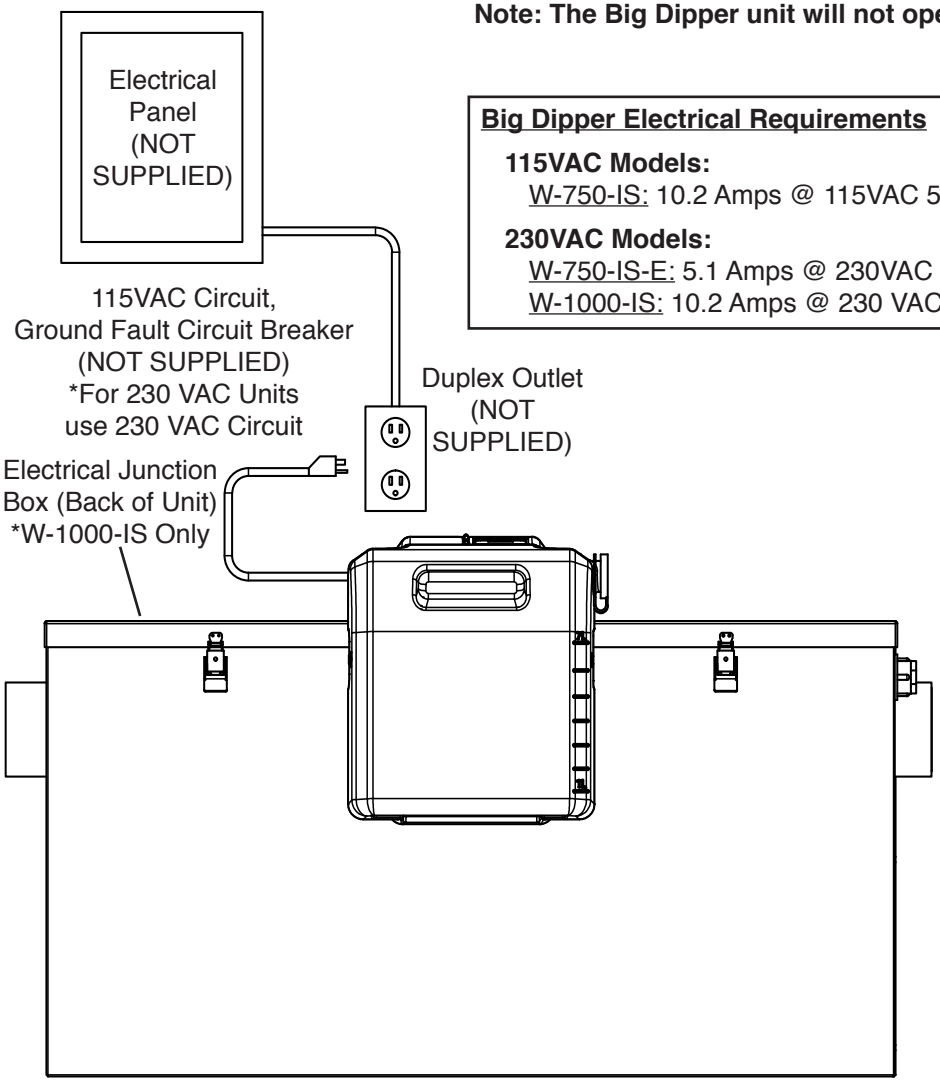

Big Dipper Electrical Requirements

115VAC Models:
W-750-IS: 10.2 Amps @ 115VAC 50/60Hz (1173 Watts)

230VAC Models:
W-750-IS-E: 5.1 Amps @ 230VAC 50/60Hz (1173 Watts)
W-1000-IS: 10.2 Amps @ 230 VAC 50/60Hz (2346 Watts)

Note:
Digital Control Supplied with system.
Drawing for reference only. Equipment must be installed in compliance with all applicable laws, regulations and codes, including electrical codes. Installation should be performed by a qualified electrician.

©2020 Thermaco, Incorporated All rights reserved • Patented/Patents Pending • Specifications subject to change without notice

646 Greensboro St. • Asheboro, N. C. 27204-2548 • Phone (336) 629-4651

BIG DIPPER®
A THERMACO® Technology

51K Series

Big Dipper® IS
Safety & Grounding Instructions

Important Safety Instructions

WARNING

When using electric appliances, basic precautions should always be followed, including the following:

a) Read all instructions before using the appliance.
b) Do not contact moving parts.
c) Only use attachments recommended or sold by the manufacturer.
d) Do not use outdoors.
e) Do no unplug by pulling on cord. To unplug, grasp the plug, not the cord.
f) Unplug from outlet when not in use and before servicing or cleaning.
g) Connect to a properly grounded outlet only. See Grounding Instructions.

Save These Instructions

Grounding Instructions

This appliance must be grounded. In the event of malfunction or breakdown, grounding provides a path of least resistance for electric current to reduce the risk of electric shock. This appliance is equipped with a cord having an equipment-grounding conductor and a grounding plug. The plug must be plugged into an appropriate outlet that is properly installed and grounded in accordance with all local codes and ordinances.

DANGER- Improper connection of the equipment-grounding conductor can result in a risk of electric shock. The conductor with insulation having an outer surface that is green with or without yellow stripes is the equipment-grounding conductor. If repair or replacement of the cord or plug is necessary, do not connect the equipment-grounding conductor to a live terminal. Check with a qualified electrician or serviceman if the grounding instructions are not completely understood, or if in doubt as to whether the appliance is properly grounded. Do not modify the plug provided with the appliance - if it will not fit the outlet, have a proper outlet installed by a qualified electrician.

©2020 Thermaco, Incorporated All rights reserved • Patented/Patents Pending • Specifications subject to change without notice
646 Greensboro St. • Asheboro, N. C. 27204-2548 • Phone (336) 629-4651

Grounding Instructions

115 V Units

This appliance is for use on a nominal 115 V circuit, and has a grounding plug that looks like the plug illustrated in drawing A below. A temporary adapter, which looks like the adapter illustrated in drawing B and C, may be used to connect this plug to a 2-pole receptacle as shown in sketch B if properly grounded outlet is not available. The temporary adapter should be used only until a properly grounded outlet can be installed by a qualified electrician. The green colored rigid ear, lug, and the like, extending from the adapter must be connected to a permanent ground such as a properly grounded outlet box cover. Whenever the adapter is used, it must be held in place by the metal screw.

230 V Units

This appliance is for use on a circuit having a nominal rating more than 120 V and is factory equipped with a specific electric cord and plug. No adapter should be used with this appliance. If the appliance must be reconnected for use on a different type of electric circuit, the reconnection should be made by qualified service personnel; and after the reconnection, the appliance should comply with all local codes and ordinances.

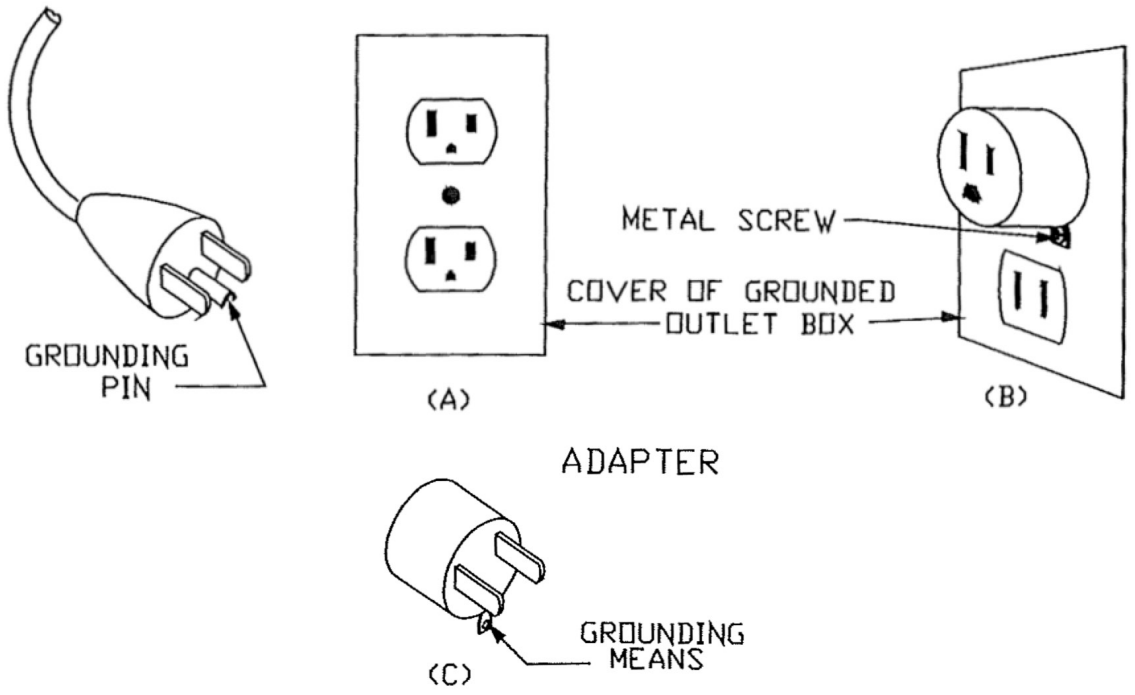

©2020 Thermaco, Incorporated All rights reserved • Patented/Patents Pending • Specifications subject to change without notice

51K Series

Big Dipper® IS System Wiring Diagram

Wiring Diagram For IS Series Center Module

W-750-IS: Uses one (1) Center Module
W-1000-IS: Uses two (2) Center Modules

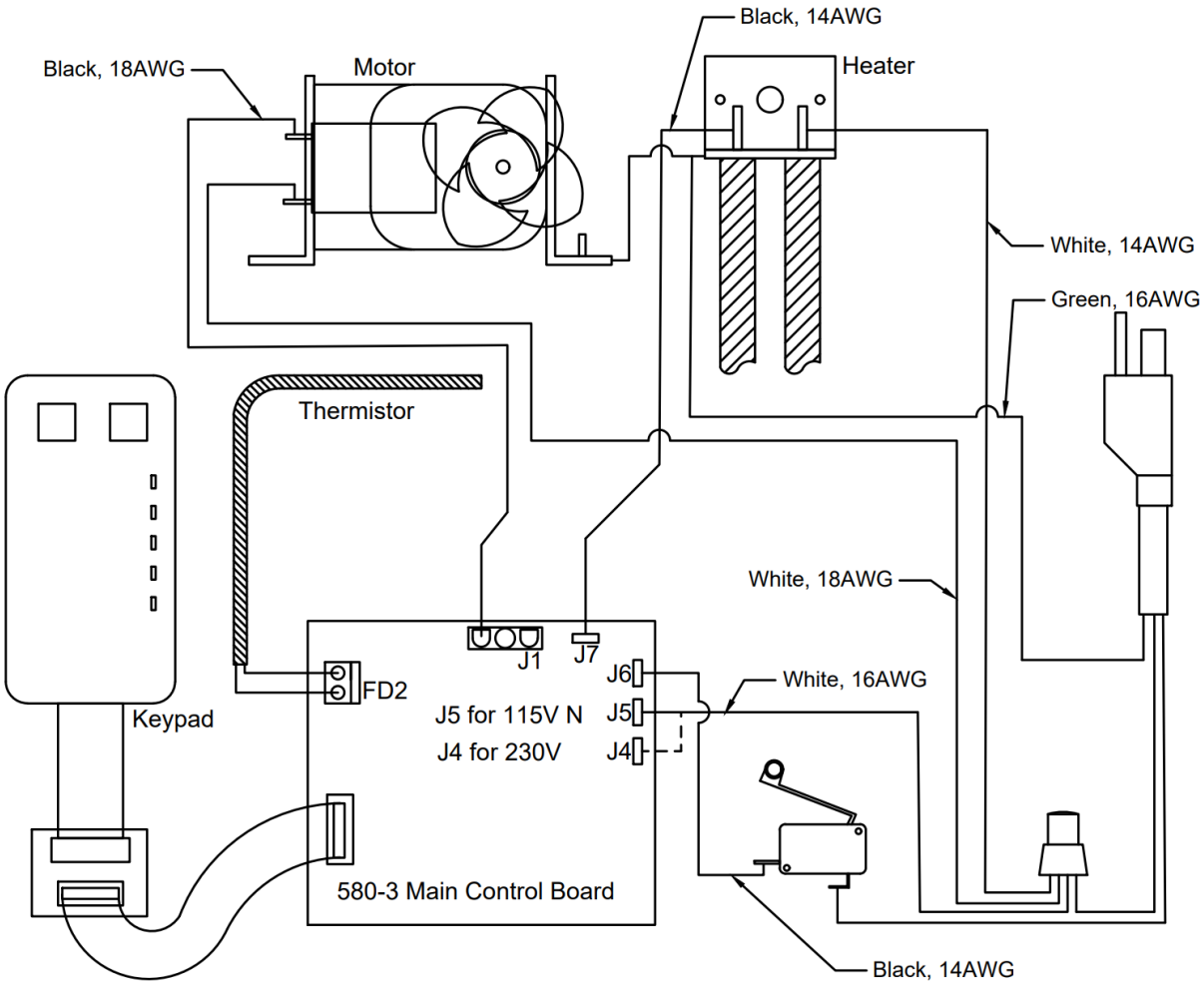

NOTE:
220-240V Units (International Units) have the following wire color changes:
On the POWER SUPPLY CORD:
The Black Wire becomes Brown
The White Wire becomes Blue
The Green Wire becomes Yellow/Green

©2020 Thermaco, Incorporated All rights reserved • Patented/Patents Pending • Specifications subject to change without notice

646 Greensboro St. • Asheboro, N. C. 27204-2548 • Phone (336) 629-4651

51K Series

Big Dipper® IS System Wiring Diagram

Junction Box Wiring Diagram For Big Dipper W-1000-IS (230 VAC)

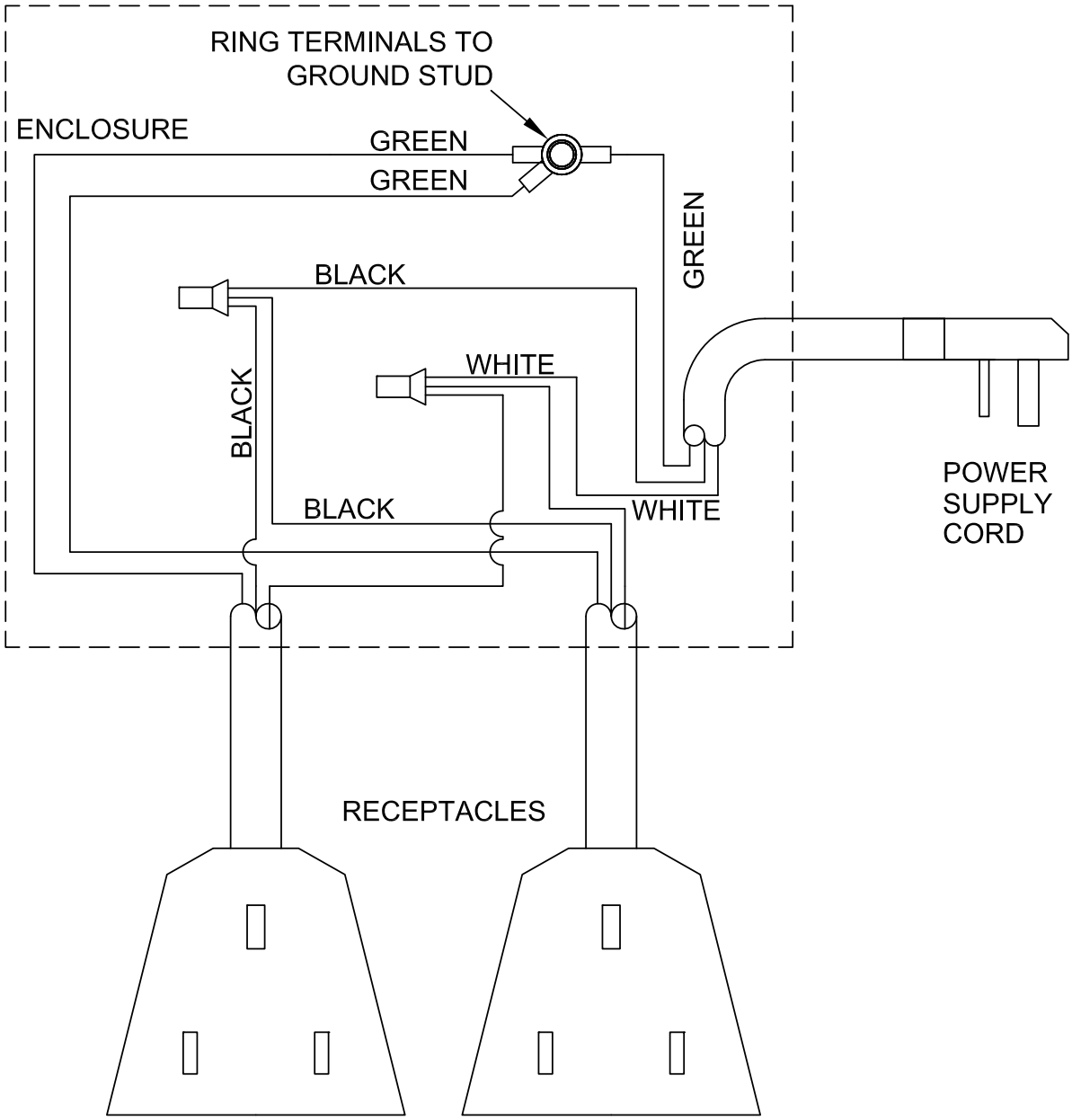

* Receptacles may differ depending on specific electrical configurations needed.

©2020 Thermaco, Incorporated All rights reserved • Patented/Patents Pending • Specifications subject to change without notice

646 Greensboro St. • Asheboro, N. C. 27204-2548 • Phone (336) 629-4651

51K Series

Big Dipper® IS System Electrical Components

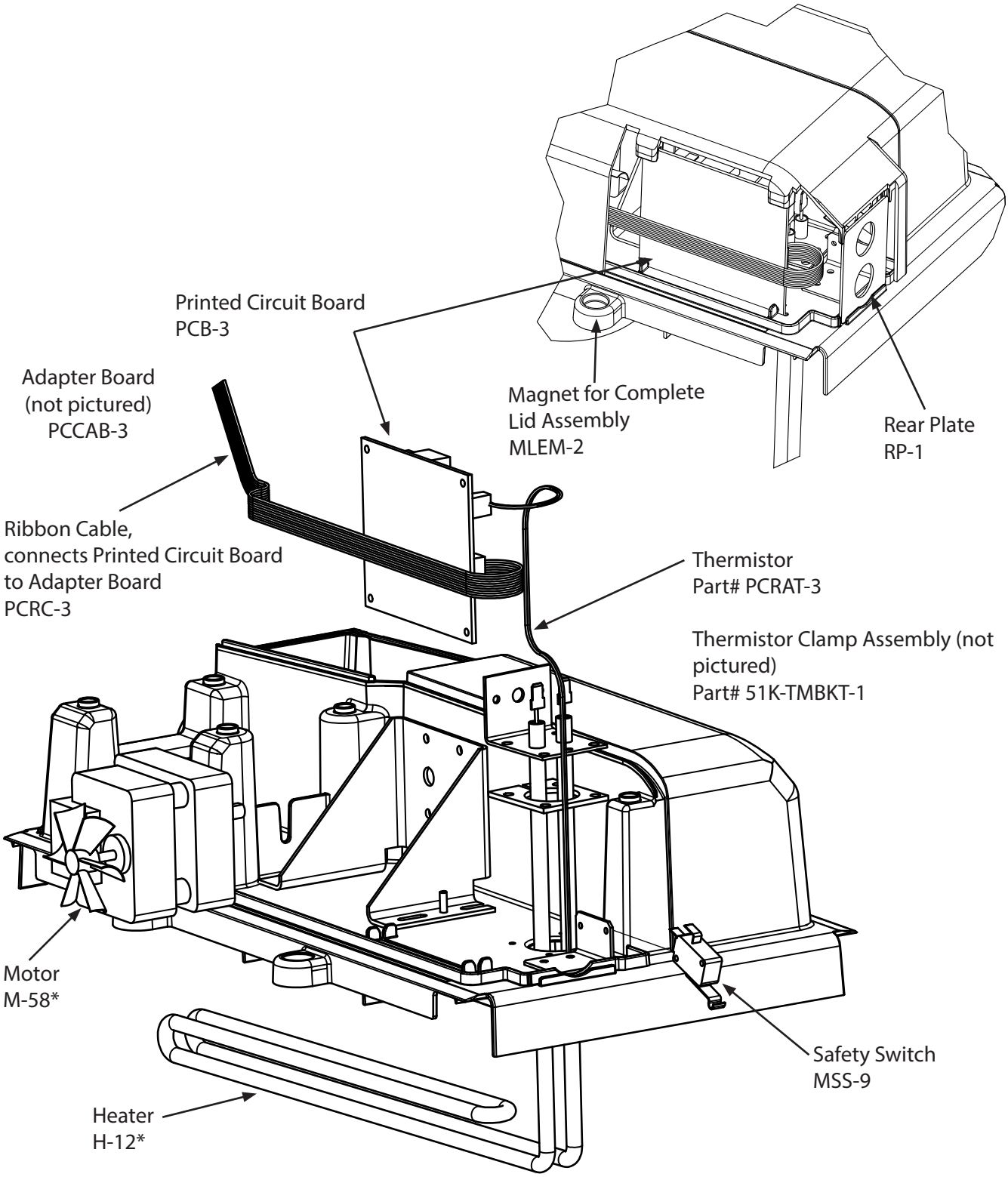

***230 VAC Units use M-58-230 and H-12-230**

©2020 Thermaco, Incorporated All rights reserved • Patented/Patents Pending • Specifications subject to change without notice

646 Greensboro St. • Asheboro, N. C. 27204-2548 • Phone (336) 629-4651

BIG DIPpER®
A THERMACO® Technology

51K Series

Big Dipper® IS System Component Identification

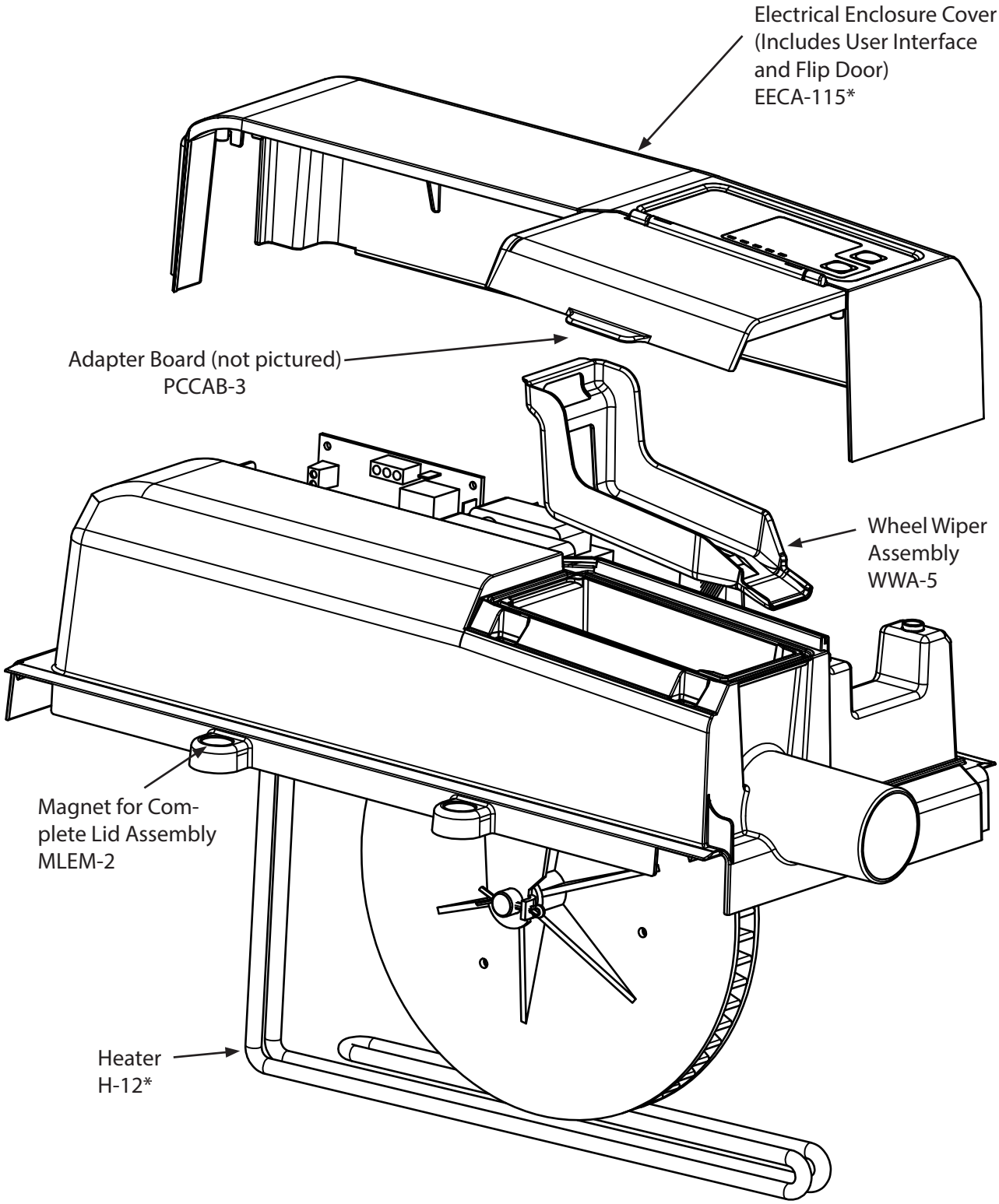

***230 VAC Units use M-58-230, H-12-230, and EECA-230**

©2020 Thermaco, Incorporated All rights reserved • Patented/Patents Pending • Specifications subject to change without notice

646 Greensboro St. • Asheboro, N. C. 27204-2548 • Phone (336) 629-4651

51K Series

Big Dipper® IS System Component Identification

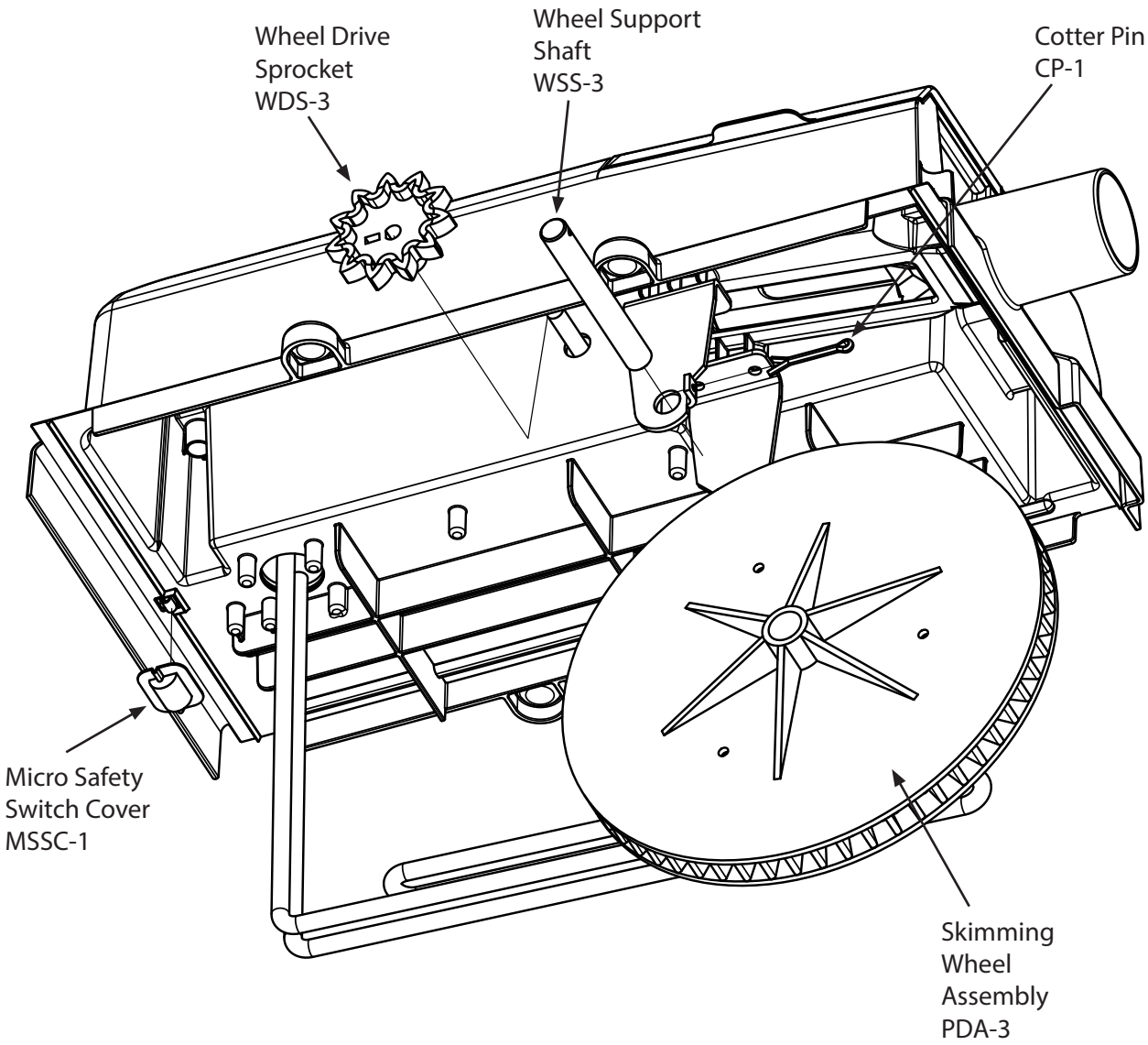

©2020 Thermaco, Incorporated All rights reserved • Patented/Patents Pending • Specifications subject to change without notice

646 Greensboro St. • Asheboro, N. C. 27204-2548 • Phone (336) 629-4651

Big Dipper® IS System Replacement Parts

SOLIDS STRAINER BASKET
FOR MODEL# USE PART#
W-750-IS AND W-1000-IS ST-97

USER INTERFACE (Under Cover)
SEE PREVIOUS PAGES REGARDING REPLACEMENT PARTS FOR ELECTRICAL ASSEMBLY

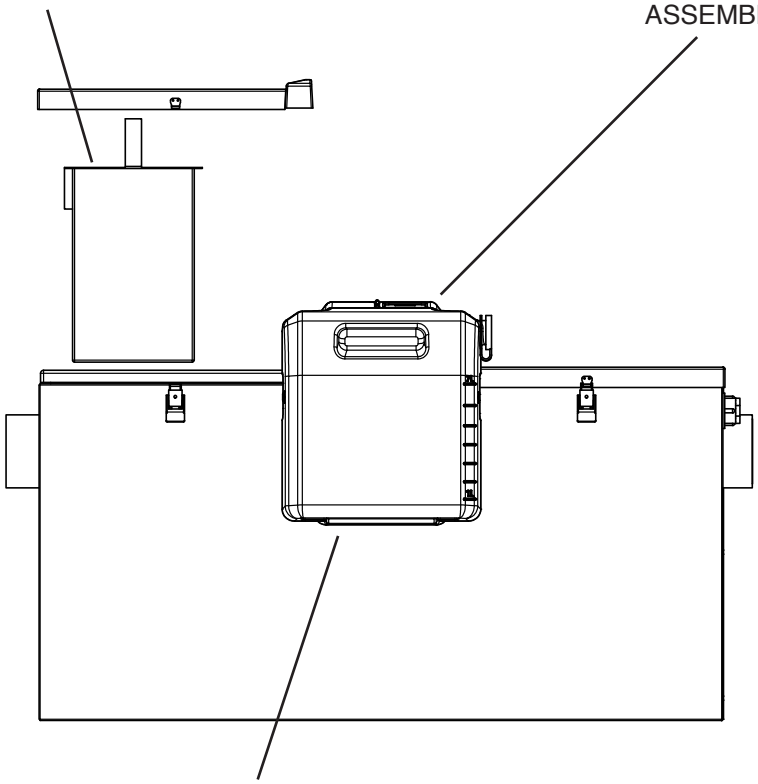

GREASE/OILS COLLECTION CONTAINER*
PART# GC-10

NOT SHOWN:

MOTOR
(1 per electrical assembly)
PART# M-58
M-58-230 in 230 VAC Units

HEATER
(1 per electrical assembly)
PART# H-12
H-12-230 in 230 VAC Units

INTERNAL FLOW CONTROL
(1 per unit)
PART# MFC-20 FOR W-200-IS
PART# MFC-25 FOR W-250-IS
PART# MFC-35 FOR W-350-IS
PART# MFC-50 FOR W-500-IS

TANK GASKET
(1 per electrical assembly)
PART# RGA-14-PS

WHEEL WIPER ASSEMBLY
(1 per electrical assembly)
PART# WWA-5

WHEEL DRIVE SPROCKET
(1 per electrical assembly)
PART# WDS-3

SKIMMING WHEEL ASSEMBLY
(1 per electrical assembly)
PART# PDA-3

SAFETY SWITCH
(1 per electrical assembly)
PART# MSS-11

HEATER GASKET
PART# HTG-300

***Note:**
W-750-IS system requires one (1)
W-1000-IS system may require two (2)

FLIP DOOR MAGNETS
(2 per Electrical Assembly)
PART# FDM-1

©2020 Thermaco, Incorporated All rights reserved • Patented/Patents Pending • Specifications subject to change without notice

51K Series

Big Dipper® Limited Warranty & Remedy

Thermaco Incorporated ("Thermaco") warrants to the original user that (i) the tank, wrap, lid ends, grease collector, and internal strainer assembly of the product manufactured by Thermaco and delivered with this warranty (the "Product") shall be free from material defects in workmanship and materials during the lifetime of the plumbing system in which such Product is initially installed, subject to the terms and conditions of this warranty and (ii) the electrical assembly delivered with this warranty shall be free from material defects in workmanship and materials for a period of thirty-six (36) months from the date of original invoice to the distributor (if sold by an authorized Thermaco distributor) or the date of invoice to the purchaser (if sold directly by Thermaco). Notwithstanding the foregoing, this warranty shall not cover, and Thermaco shall have no obligation to repair or replace, any of the following component parts of the Product: gaskets, wiper blades, flip door gaskets, magnets, and flow control.

Any and all warranty claims must be made in writing to Thermaco at 646 Greensboro Street, Asheboro, NC 27203, promptly after discovery of the warrantied defect and within the applicable warranty period. Following and subject to Thermaco's preliminary approval of a warranty claim, the warrantied Product must be delivered, prepaid, to Thermaco, together with proof of purchase (which must be dated), the Product's serial number, and a return authorization number issued by Thermaco. If Thermaco determines upon examination that the Product is defective and that the warranty conditions are satisfied, Thermaco's sole obligation under this warranty, and the original user's sole and exclusive remedy, is the repair or replacement, at Thermaco's sole discretion, of the defective equipment, component, or parts. Any replacements will be furnished F.O.B. point of shipment. Thermaco reserves the right to ship the user replacement parts with installation instructions. If Thermaco determines that the part, component, or the Product is not defective or that any condition of this warranty is not satisfied, then Thermaco shall have no obligation to the original user to repair or replace any such part, component, or the Product, and any return of such part, component, or the Product shall be at the original user's cost.

This warranty shall not cover any defect in an otherwise covered Product resulting directly or indirectly from (and the occurrence of any of the following shall void any otherwise applicable warranty claim): (i) failure to install, operate or maintain the product in accordance with Thermaco's instructions and procedures, including, without limitation, use in excess of rated flow, improper electrical service, use to remove emulsified fats and oils or use that fails to comply with applicable laws, regulations or codes; (ii) damage in transit, handling or installation; (iii) modifications, adjustments, repairs, or alterations made by persons other than Thermaco representatives or certified plumbers or electricians (with respect to the electronic components); (iv) any change in the original installation or change to the original use of the Product; or (v) other causes not arising out of defects in workmanship or materials. Thermaco shall not be responsible for damage to products resulting from vault flooding, sewer line back-up, pumping or lift station failure, ambient water flow or other sources of water damage. This warranty does not cover equipment or parts not manufactured by Thermaco. Original user's costs relating to any service, adjustment, removal, repair, packing, or otherwise incurred with respect to the defect prior to submission for warranty are the responsibility of the original user. No distributor, sales person or other person is authorized to make any warranty statements on behalf of Thermaco regarding Thermaco products other than as set forth in this warranty. This statement of warranty supersedes and replaces any quote, brochure, or other statement or document with respect to warranty of the Product.

EXCEPT AS EXPRESSLY SET FORTH ABOVE, THERMACO MAKES NO REPRESENTATIONS, WARRANTIES OR GUARANTEES, EITHER EXPRESSED OR IMPLIED, INCLUDING, WITHOUT LIMITATION, AS TO MERCHANTABILITY OR FITNESS FOR A PARTICULAR PURPOSE, WHETHER OR NOT THERMACO HAD KNOWLEDGE OF THE ORIGINAL USER'S PARTICULAR REQUIREMENTS OR NEEDS, OR WITH RESPECT TO ODOR GENERATION OR OTHER INCIDENTALS RELATING TO USE OF THE PRODUCT.

The sole and exclusive remedy with respect to this warranty any other claim relating to defects or any other condition or use of the Product, however caused, and whether such claim is based upon warranty, contract, tort, strict liability or any other theory, is LIMITED to the repair or replacement of the effected Product, component, or parts, in each case excluding labor or any other cost to remove or install the Product, at Thermaco's sole option, refund of the original purchase price. IN NO EVENT SHALL THERMACO BE LIABLE, WHETHER IN CONTRACT, WARRANTY, TORT (INCLUDING NEGLIGENCE), STRICT LIABILITY, INDEMNITY OR ANY OTHER LEGAL THEORY, FOR INCIDENTAL OR CONSEQUENTIAL DAMAGES, OR FOR ANY OTHER LOSS OR COST OF A SIMILAR TYPE. UNDER NO CIRCUMSTANCES WILL THE AGGREGATE LIABILITY OF THERMACO FOR ANY CAUSE OF ACTION RELATED TO THE PRODUCTS COVERED HEREBY EXCEED THE NET PURCHASE PRICE RECEIVED BY THERMACO FOR THE PRODUCTS. Any action or suit by the initial user against Thermaco relating to the Product must be brought within three (3) years of the date of the invoices referenced above in cases pertaining to the electrical assembly. This Warranty is made only for the benefit of the original user and is void upon any transfer of ownership.

©2020 Thermaco, Incorporated All rights reserved • Patented/Patents Pending • Specifications subject to change without notice